Bentley

Regent mirror

Drilling drawing

All dimensions in millimetres (mm)

3 YEAR WARRANTY

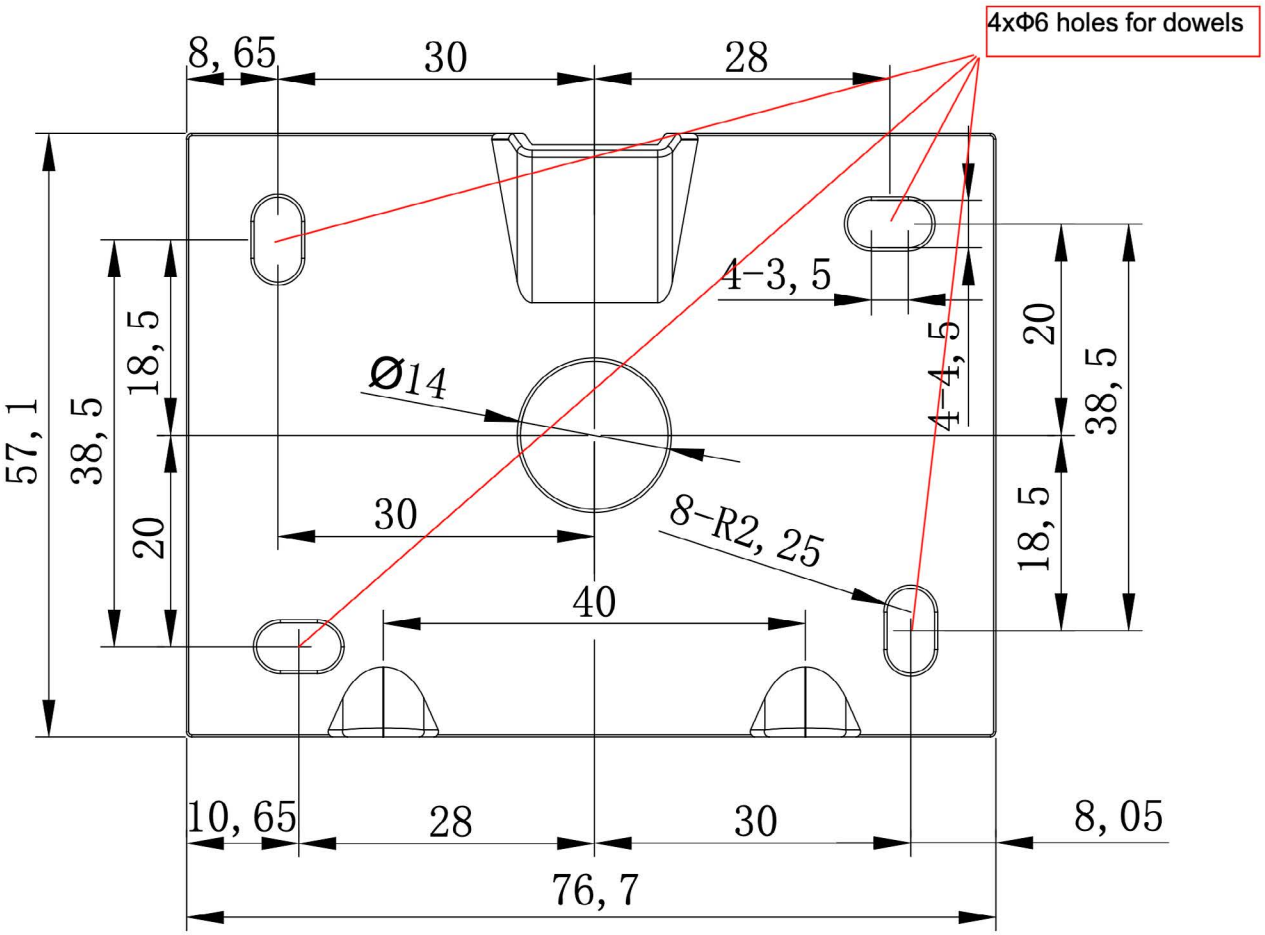

Drawing for reference only.